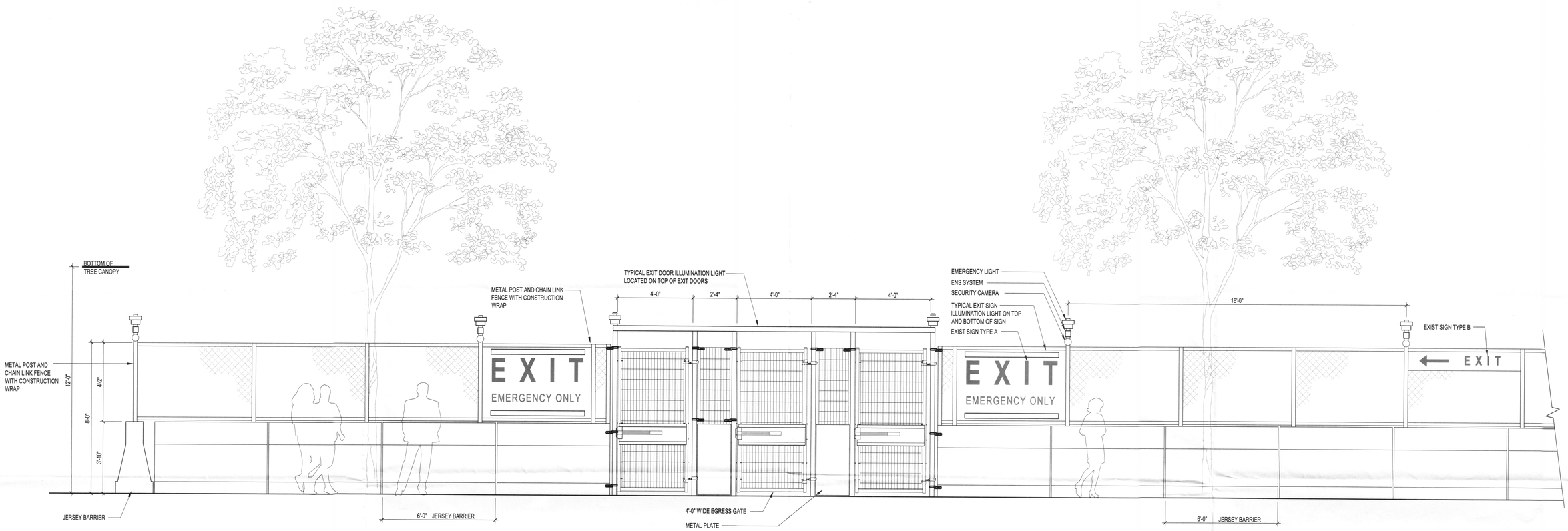

TYP. EXIT DOOR ELEVATION DETAIL - WITH JERSEY BARRIER AND CONSTRUCTION WRAP SCALE 3/8"=1'-0"

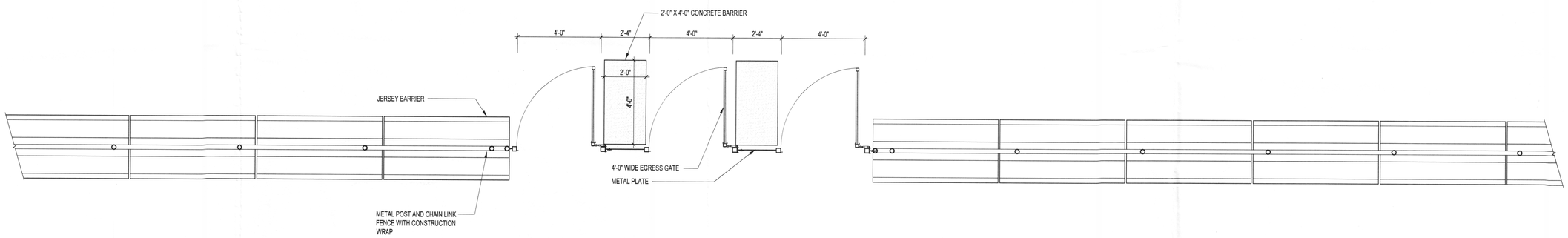

TYP. EXIT DOOR PLAN DETAIL SCALE 3/8"=1'-0"

JBB & JAROS BAUM & BOLLES

GW Gertler & Wente ARCHITECTS LLP

NATIONAL SEPTEMBER 11 MEMORIAL AND MUSEUM
MEMORIAL PLAZA DAY 2: CONCEPT PLANS FOR FENCE, GATES & SIGNAGE
90 WEST STREET NEW YORK, NY

APRIL 1, 2011
SCALE: 1/32" = 1'-0"

PL-3